Professional high-speed optical transceiver

OPN-S9PD49-10LC2 / OPN-S9PD49-10LC2I

25GE / 100GHz DWDM / 10 km Digital Diagnostic SFP28 LC SINGLE-MODE TRANSCEIVER

PRODUCT FEATURES

- Up to 25.78 Gbps Bi-directional Data Links
- Complaint with SFF-8402 SFP28 MSA
- Compliant with 25G Ethernet
- Support CPRI Option 10 @ 24.33Gbps
- Built-in dual CDR
- Distance up to 10 km
- Temperature-stabilized DWDM EML Transmitter
- 100 GHz ITU Grid, C Band
- SFF-8472 Digital Diagnostic Function
- AC/AC Coupling according to MSA
- Single +3.3 V Power Supply
- Power Consumption < 2W: OPN-S9PD49-10LC2
- Power Consumption < 2.3W: OPN-S9PD49-10LC2I
- RoHS Compliant
- 0 to 70ºC Operation: OPN-S9PD49-10LC2
- -50 to 85 ºC Operation: OPN-S9PD49-10LC2I
- Class 1 Laser International Safety Standard IEC-60825Compliant
- Enhanced EWRAP, OWRAP, and CDR bypassoperational features

APPLICATIONS

- 25G Ethernet
- CPRI Option 10

PRODUCT DESCRIPTION

The OPN-S9PD49-10LC2I series single mode transceiver is a small form factor pluggable module for bi-directional serial optical data communications such as 25G Ethernet and CPRI Option 10. It is with the SFP+ 20-pin connector to allow hot plug capability. Digital diagnostic functions areavailable via an I^2C. This module is designed for single mode fiber and operates at a nominal wavelength of 100GHz ITU Grid, C Band DWDM wavelength. Thetransmitter section uses temperature-stabilized DWDMelectrical-modulated laser (EML) and is a class 1 laser compliant according to International Safety Standard IEC-60825. The receiver section uses an integrated InGaAs detector preamplifier (IDP) mounted in an optical header and a rate selection clock data recovery (CDR) IC.

ORDER INFORMATION

P/No.	Bit Rate (Gb/s)	25GBASE	Distance (km)	Spacing (GHz)	Wavelength(nm)	Package	Case Temp (ºC)	RoHS Compliant
OPN-S9PD49-10LC2	24.33 / 25.78	LR	10	100	DWDM*	SFP28 with DMI	0 to 70	Yes
OPN-S9PD49-10LC2I	24.33 / 25.78	LR	10	100	DWDM*	SFP28 with DMI	-50 to 85	Yes

*XX: 100GHz ITU Grid wavelength (Please see below)

Channel #	Product code	Frequency (THz)	Center Wavelength (nm)	Label
20	OPN-S9PD20-10LC2	192.0	1561.42	D20
21	OPN-S9PD21-10LC2	192.1	1560.61	D21
22	OPN-S9PD22-10LC2	192.2	1559.79	D22
23	OPN-S9PD23-10LC2	192.3	1558.98	D23
24	OPN-S9PD24-10LC2	192.4	1558.17	D24
25	OPN-S9PD25-10LC2	192.5	1557.36	D25
26	OPN-S9PD26-10LC2	192.6	1556.55	D26
27	OPN-S9PD27-10LC2	192.7	1555.75	D27
28	OPN-S9PD28-10LC2	192.8	1554.94	D28
29	OPN-S9PD29-10LC2	192.9	1554.13	D29

Professional high-speed optical transceiver

30	OPN-S9PD30-10LC2	193.0	1553.33	D30
31	OPN-S9PD31-10LC2	193.1	1552.52	D31
32	OPN-S9PD32-10LC2	193.2	1551.72	D32
33	OPN-S9PD33-10LC2	193.3	1550.92	D33
34	OPN-S9PD34-10LC2	193.4	1550.12	D34
35	OPN-S9PD35-10LC2	193.5	1549.32	D35
36	OPN-S9PD36-10LC2	193.6	1548.51	D36
37	OPN-S9PD37-10LC2	193.7	1547.72	D37
38	OPN-S9PD38-10LC2	193.8	1546.92	D38
39	OPN-S9PD39-10LC2	193.9	1546.12	D39
40	OPN-S9PD40-10LC2	194.0	1545.32	D40
41	OPN-S9PD41-10LC2	194.1	1544.53	D41
42	OPN-S9PD42-10LC2	194.2	1543.73	D42
43	OPN-S9PD43-10LC2	194.3	1542.94	D43
44	OPN-S9PD44-10LC2	194.4	1542.14	D44
45	OPN-S9PD45-10LC2	194.5	1541.35	D45
46	OPN-S9PD46-10LC2	194.6	1540.56	D46
47	OPN-S9PD47-10LC2	194.7	1539.77	D47
48	OPN-S9PD48-10LC2	194.8	1538.98	D48
49	OPN-S9PD49-10LC2	194.9	1538.19	D49
50	OPN-S9PD50-10LC2	195.0	1537.40	D50
51	OPN-S9PD51-10LC2	195.1	1536.61	D51
52	OPN-S9PD52-10LC2	195.2	1535.82	D52
53	OPN-S9PD53-10LC2	195.3	1535.04	D53
54	OPN-S9PD54-10LC2	195.4	1534.25	D54
55	OPN-S9PD55-10LC2	195.5	1533.47	D55
56	OPN-S9PD56-10LC2	195.6	1532.68	D56
57	OPN-S9PD57-10LC2	195.7	1531.90	D57
58	OPN-S9PD58-10LC2	195.8	1531.12	D58
59	OPN-S9PD59-10LC2	195.9	1530.33	D59
60	OPN-S9PD60-10LC2	196.0	1529.55	D60
61	OPN-S9PD61-10LC2	196.1	1528.77	D61

Absolute Maximum Ratings

Parameter	Symbol	Min	Max	Units	Notes
Storage Temperature	Tstg	-50	85	ºC	
Relative Humidity	RH	5	85	%	Non-condensing
Operating Case Temperature	Topr	0 -50	70 85	ºC	OPN-S9PD49-10LC2 OPN-S9PD49-10LC2I
Power Supply Voltage	Vcc	-0.5	3.6	V	
Receiver Input Optical Power	Mip		3	dBm	Average power

Recommended Operating Conditions

Parameter	Symbol	Min	Typ	Max	Units / Notes
Power Supply Voltage	Vcc	3.135	3.3	3.465	V
Operating Case Temperature	Topr	0 -50		70 85	ºC / OPN-S9PD49-10LC2 ºC / OPN-S9PD49-10LC2I
Relative Humidity	RH	5		85	% / Non-condensing
			400 400	550 650	mA / OPN-S9PD49-10LC2 mA / OPN-S9PD49-10LC2I
Data Rate			24.33 / 25.78		Gb/s

Transmitter Optical Specifications (-50°C < Topr < 85°C, 3.13V < Vcc < 3.47V)

Parameter	Symbol	Min	Typ	Max	Units	Notes
Average Launch Power	$P_{o,AVG}$	-3		+2	dBm	1
Extinction Ratio	ER	6			dB	
Center Wavelength Spacing			100		GHz	2

Professional high-speed optical transceiver

Transmitter Center Wavelength -- over life time	λc	X-100	X	X+100	pm	3
Output Spectrum Width	Δλ	---		1	nm	-20 dB width
Side Mode Suppression Ratio	SMSR	30			dB	
Relative Intensity Noise	RIN			-130	dB/Hz	
Average Launch Power of OFF Transmitter				-30	dBm	

1. Output power is power coupled into a 9/125 μm single-mode fiber.
2. Corresponds to approximately 0.8 nm.
3. X = specified ITU Grid wavelength.

Receiver Optical Specifications (-50°C < Topr < 85°C, 3.13V < Vcc < 3.47V)						
Parameter	**Symbol**	**Min**	**Typ**	**Max**	**Units**	**Notes**
Sensitivity, Average				-13	dBm	4
Receiver Overload	P_{MAX}	+2	---		dBm	
LOS – Deasserted	LOS_D	---	---	-16	dBm	Transition: low to high
LOS – Asserted	LOS_A	-26	---	---	dBm	Transition: high to low
Wavelength of Operation	λc	1260		1580	nm	
Optical Return Loss	ORL			-27	dB	

4. @ BER < 5E-5 and PRBS 2^{31}-1.

Electrical Characteristics						
Parameter	**Symbol**	**Min**	**Typ**	**Max**	**Units**	**Notes**
High-Speed Signal (CML) Interface Specification						
Input Data Rate			24.33/25.78		Gb/s	
TX Clock Tolerance		-100		+100	ppm	5
Differential Input Impedance	Rin		100		Ω	
Differential Data Input Amplitude		150		1000	mVpp	Internally AC coupled
Output Data Rate			24.33/25.78		Gb/s	
RX Clock Tolerance		-100		+100	ppm	5
Differential Output Impedance	Rout		100		Ω	
Differential Data Output Amplitude		350	600	700	mVpp	Internally AC coupled
Low-Speed Signal (LVTTL) Interface Specification						
Input High Voltage		2.0		Vcc+0.3	V	
Input Low Voltage		GND		0.8	V	
Output High Voltage		2.4		Vcc	V	
Output Low Voltage		GND		0.5	V	

5. Clock tolerance for 24.33Gb/s and 25.78Gb/s.

Professional high-speed optical transceiver

CONNECTION DIAGRAM

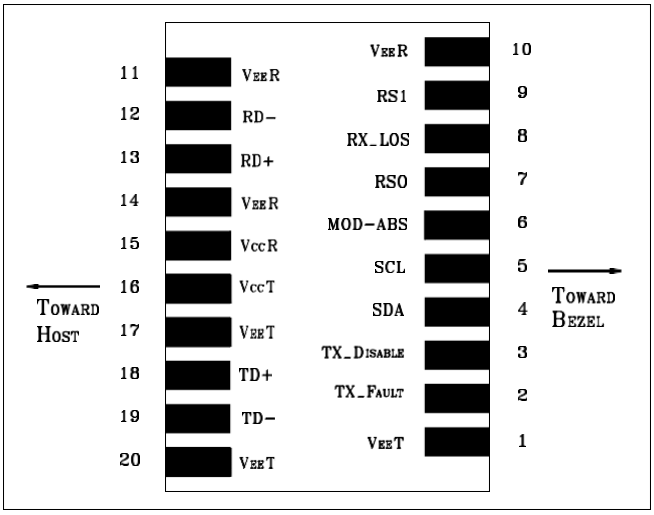

PIN	Signal Name	Description	PIN	Signal Name	Description
1	$V_{EE}T$	Transmitter Signal Ground	11	$V_{EE}R$	Receiver Signal Ground
2	TX_Fault	Transmitter Fault Indication. Logic “1” Output = Laser Fault. Logic “0” Output = Normal Operation	12	RD-	Inverse Receiver Data Out
3	TX_Disable	Logic “1” Input (or no connection) = Laser off, Logic “0” = Laser on.	13	RD+	Receiver Data Out
4	SDA	Modulation Definition 2 – Two wires serial ID Interface	14	$V_{EE}R$	Receiver Signal Ground
5	SCL	Modulation Definition 1 – Two wires serial ID Interface	15	$V_{CC}R$	Receiver Power – 3.3V±5%
6	MOD-ABS	Modulation Definition 0 – Ground in Module	16	$V_{CC}T$	Transmitter Power – 3.3V±5%
7	RS0	RX Rate Select: (See Rate Select Control) Open or Low: Low Bandwidth High: High Bandwidth for 25G	17	$V_{EE}T$	Transmitter Signal Ground
8	RX_LOS	Loss of Signal Out (OC).	18	TD+	Transmitter Data In
9	RS1	TX Rate Select: (See Rate Select Control) Open or Low: Low Bandwidth High: High Bandwidth for 25G	19	TD-	Inverse Transmitter Data In
10	$V_{EE}R$	Receiver Signal Ground	20	$V_{EE}T$	Transmitter Signal Ground

MODULE DEFINITION

Module Definition	PIN 4	PIN 5	PIN 6	Interpretation by Host
4	SDA	SCL	MOD-ABS	Serial module definition protocol

Module Definition 4 specifies a serial definition protocol. For this definition, upon power up, SDA and SCL appear as no connector (NC) and MOD-ABS is TTL LOW. When the host system detects this condition, it activates the serial protocol. The protocol uses the 2-wire serial CMOS E^2PROM protocol of the ATMEL AT24C01A/02/04 family of components.

Professional high-speed optical transceiver

RECOMMENDED CIRCUIT SCHEMATIC

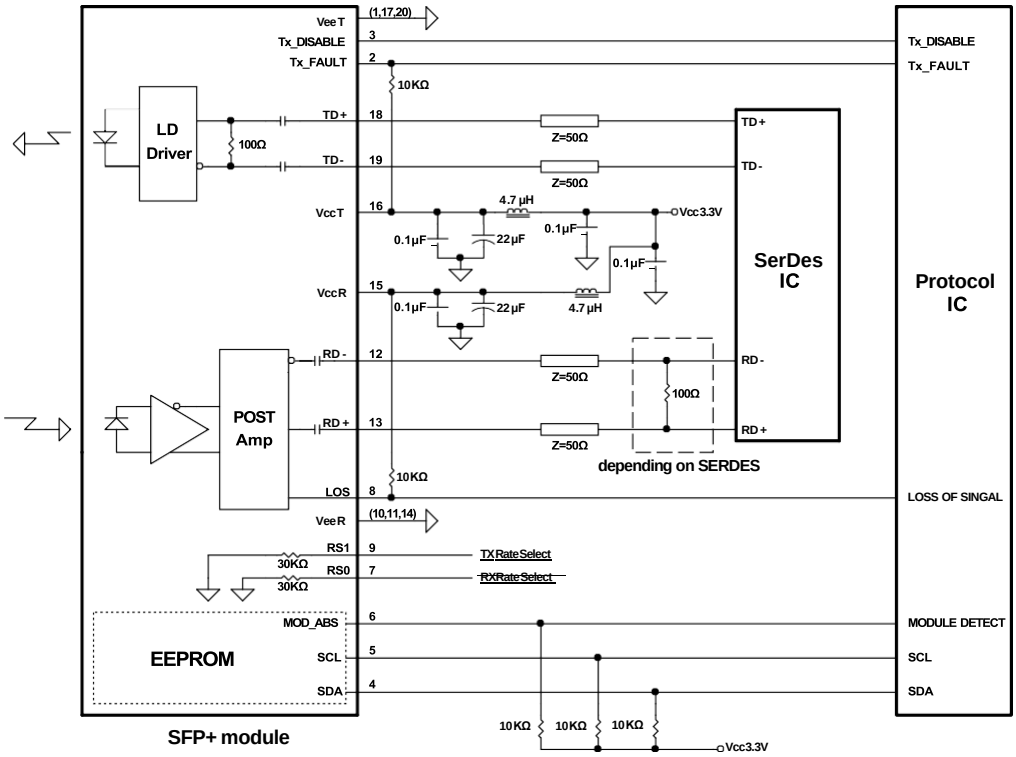

PACKAGE DIAGRAM

Units in mm

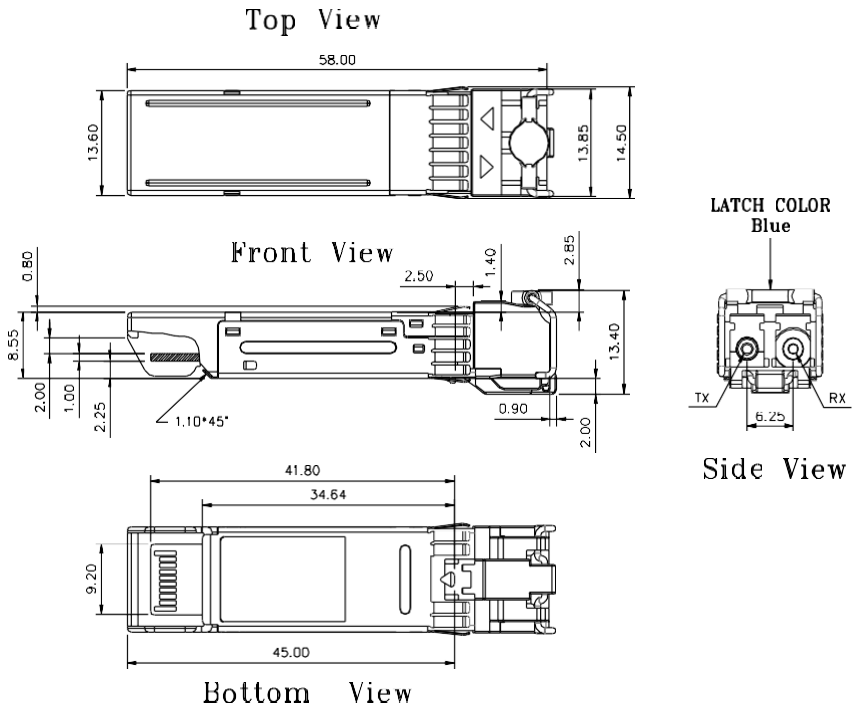

Note: Specifications subject to change without notice.

Professional high-speed optical transceiver

WRAP AND BYPASS CDR OPERATION FUNCTIONS - SOFT CONTROL (Address A2h, Byte 111).

To assist with local host or remote diagnostic and optimization sequences, electrical and optical wrap functions can be enabled. Optical wrap (OWRAP) takes the received optical signal through CDRs and retransmits it optically out. Electrical wrap (EWRAP) takes the received electrical signal through CDRs and retransmits it electrically out. Optional forward functions can be transmitted outbound the wrapped information via i2c control.

Byte	Bit	Name	Description
111	7	TX CDR Bypass	When set, bypass the TX CDR.
	6	RX CDR Bypass	When set, bypass the RX CDR.
	4-5	Reserved	Reserved.
	3	OWRAP Forward Enable Bit	When set in combination with OWRAP Enable, OWRAP Forward routes incoming SFP+ Rx optical data to both the Tx optical output and the Rx electrical output. Enabling sets bit 2 and clears all other bits in byte 111.
	2	OWRAP Enable Bit	When set, OWRAP routes incoming SFP+ Rx optical data to the Tx optical output. Enabling clears all other bits in byte 111.
	1	EWRAP Forward Enable Bit	When set in combination with EWRAP Enable, EWRAP Forward routes incoming SFP+ Tx electrical data to both Rx electrical output and Tx optical output. Enabling sets bit 0 and clears all other bits in byte 111.
	0	EWRAP Enable Bit	When set, EWRAP Enable routes incoming SFP+ Tx electrical data to the Rx electrical output. Enabling clears all other bits in byte 111.

OWRAP FORWARD ENABLE MODE (I2C CONTROLLED)

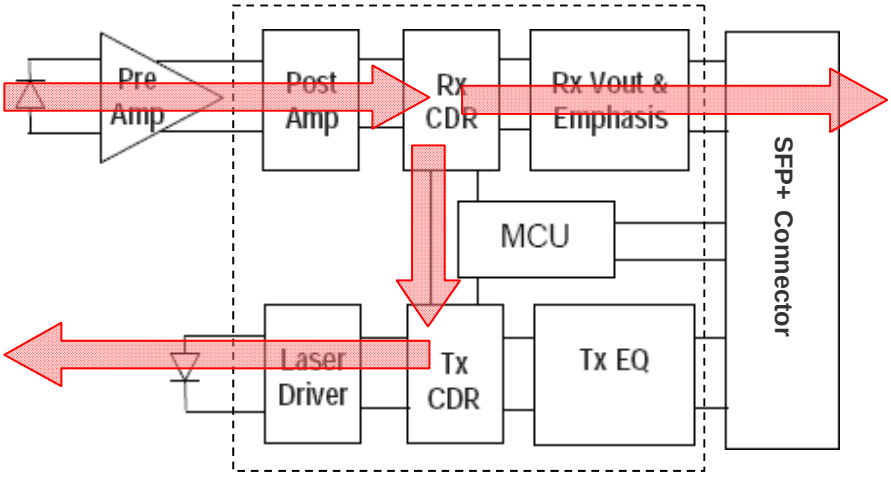

OWRAP ENABLE MODE (I2C CONTROLLED)

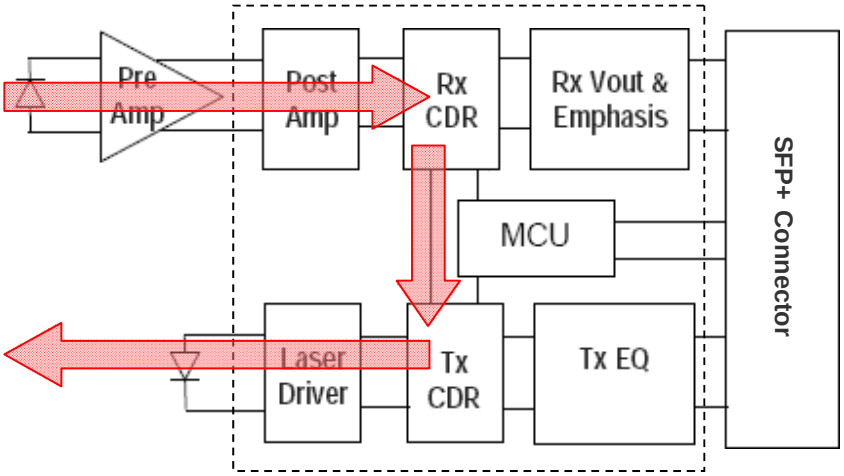

Professional high-speed optical transceiver

EWRAP FORWARD ENABLE MODE (I2C CONTROLLED)

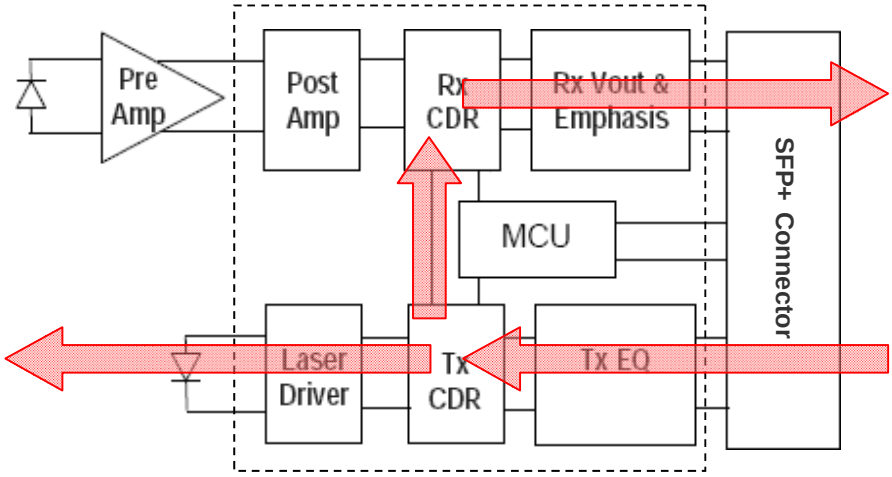

EWRAP ENABLE MODE (I2C CONTROLLED)

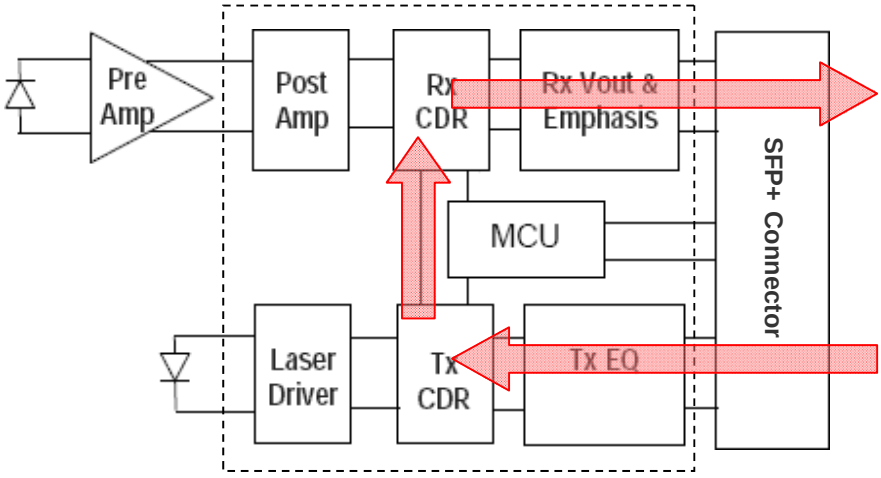

RATE SELECT CONTROL

RX / TX rate can be independently controlled by RS0 / RS1 input pin (Hardware). RS0 / RS1 input pins (pin 7 / 9) are used to select RX / TX rate. Status of RS0 / RS1 input pin logic level is reflected to register byte 110 bit 4 / 5 on address A2h. RS0 / RS1 input pin must be “High” for 24.33G or 25GE transmission. To have flexible transmission data rate other than 25GE, and CPRI option 10, user may assert TX and/or RX CDR Bypass bits (A2h, Byte 111, [7:6]) to bypass the CDR if required.

Professional high-speed optical transceiver

EEPROM Series ID Memory Contents (Address A0h)

Addr.	Hex	ASCII	Note	Addr.	Hex	ASCII	Note	Addr.	Hex	ASCII	Note	Addr.	Hex	ASCII	Note
0	03		SFP28	32	20			64	3C		Power Level 3, w/ CDR, Cooled Tx, Rate Select, Txdis, Txfault, LOS	96	00		Vendor specific EEPROM
1	04			33	20			65	3A			97	00		
2	07		LC	34	20			66	67		25.78Gbps	98	00		
3	00			35	20			67	00			99	00		
4	00			36	03		25GBASE-LR	68			Serial number: each piece with different serial number	100	00		
5	00			37	00		Vendor IEEE OUI	69				101	00		
6	00			38	0E			70				102	00		
7	00			39	FA			71				103	00		
8	00			40	53	S	Part Number	72				104	00		
9	00			41	50	P		73				105	00		
10	00			42	53	S		74				106	00		
11	06		64B/66B	43	2D	-		75				107	00		
12	FF		> 25.4Gbps	44	32	2		76				108	00		
13	00			45	35	5		77				109	00		
14	0A		10 km	46	31	1		78				110	00		
15	64		10 km	47	31	1		79				111	00		
16	00			48	57	W		80				112	00		
17	00			49	2D	-		81				113	00		
18	00			50	44	D		82				114	00		
19	00			51	3X	X		83				115	00		
20	4F	O	Vendor name	52	3X	X		84		Y	Date Code	116	00		
21	50	P		53	47	G		85		Y		117	00		
22	54	T		54	20			86		M		118	00		
23	4F	O		55	20			87		M		119	00		
24	57	W		56	30	0	Revision, depended on version	88		D		120	00		
25	41	A		57	30	0		89		D		121	00		
26	59	Y		58	30	0		90	20			122	00		
27	20			59	31	1		91	20			123	00		
28	20			60			DWDM Wavelength	92	68		Monitoring	124	00		
29	20			61				93	F0		Soft Control and Monitoring	125	00		
30	20			62				94	08		SFF-8472 V12.0	126	00		
31	20			63			Checksum 0-62	95			Checksum 64-94	127	00		

Professional high-speed optical transceiver

EEPROM Series ID Memory Contents (Address A2h)

Addr.	Hex	Note	Addr.	Hex	Note	Addr.	Hex	Note	Addr.	Hex	Note
0	4B	Temp. High Alarm (75°C)	32	4D	Rx Power High Alarm (3dBm)	64	00	For External Cal.	96		Real Time Temp. MSB
1	00		33	F1		65	00	For External Cal.	97		Real Time Temp. LSB
2	FB	Temp. Low Alarm(-5°C)	34	01	Rx Power Low Alarm (-15dBm)	66	00	For External Cal.	98		Real Time Vcc MSB
3	00		35	3C		67	00	For External Cal.	99		Real Time Vcc LSB
4	49	Temp. High Warming(73°C)	36	3D	Rx Power High Warming (2dBm)	68	3F	For External Cal.	100		Real Time Tx Bias MSB
5	00		37	E9		69	80	For External Cal.	101		Real Time Tx Bias LSB
6	00	Temp. Low Warming (0°C)	38	01	Rx Power Low Warming(-13dBm)	70	00	For External Cal.	102		Real Time Tx Pwr MSB
7	00		39	F5		71	00	For External Cal.	103		Real Time Tx Pwr LSB
8	8C	Voltage High Alarm (3.6V)	40	3C	LD Temp. High Alarm (60°C)	72	00	For External Cal.	104		Real Time Rx Pwr MSB
9	A0		41	00		73	00	For External Cal.	105		Real Time Rx Pwr LSB
10	75	Voltage Low Alarm(3.0V)	42	19	LD Temp. Low Alarm(25°C)	74	00	For External Cal.	106		Reserved
11	30		43	00		75	00	For External Cal.	107		Reserved
12	88	Voltage High Warming(3.5V)	44	37	LD Temp. High Warming(55°C)	76	01	For External Cal.	108		Reserved
13	B8		45	00		77	00	For External Cal.	109		Reserved
14	79	Voltage Low Warming (3.1V)	46	1E	LD Temp. Low Warming (30°C)	78	00	For External Cal.	110		Tx Dis, Tx Fault, Rx Los
15	18		47	00		79	00	For External Cal.	111		CDR Bypass, OWRAP, EWRAP
16	FD	Tx Bias High Alarm(130mA)	48	27	ITEC High Alarm(1000mA)	80	01	For External Cal.	112		Alarm Flag
17	E8		49	10		81	00	For External Cal.	113		Alarm Flag/Reserved
18	13	Tx Bias Low Alarm(10mA)	50	D8	ITEC Low Alarm(-1000mA)	82	00	For External Cal.	114		Reserved
19	88		51	F0		83	00	For External Cal.	115		Reserved
20	EA	Tx Bias High Warming(120mA)	52	27	ITEC High Warming(1000mA)	84	01	For External Cal.	116		Warming Flag
21	60		53	10		85	00	For External Cal.	117		Warming Flag/Reserved
22	1D	Tx Bias Low Warming(15mA)	54	D8	ITEC Low Warming(-1000mA)	86	00	For External Cal.	118		RS1 Select
23	4C		55	F0		87	00	For External Cal.	119		Reserved
24	4D	Tx Power High Alarm (3dBm)	56	00	For External Cal.	88	01	For External Cal.	120		Vendor Specific
25	F1		57	00	For External Cal.	89	00	For External Cal.	121		
26	0F	Tx Power Low Alarm(-4dBm)	58	00	For External Cal.	90	00	For External Cal.	122		
27	8D		59	00	For External Cal.	91	00	For External Cal.	123		
28	3D	Tx Power High Warming(2dBm)	60	00	For External Cal.	92	00	For External Cal.	124		
29	E9		61	00	For External Cal.	93	00	For External Cal.	125		
30	13	Tx Power Low Warming (-3dBm)	62	00	For External Cal.	94	00	For External Cal.	126		
31	94		63	00	For External Cal.	95		Check Sum	127		

Note: Address 128 – 247: customer R/W eeprom. Address 248 – 255: Vendor Specific.