Professional high-speed optical transceiver

OPN-Q7M1312-10LC

100GE / 10km / 1330nm TX / 1270nm RX QSFP28 BiDi SINGLE-FIBER Optical Transceiver

PRODUCT FEATURES

- Up to 106.25Gbps Data Rate Single Channel
- 1x106.25Gbps PAM4 Line Side,
  4x25.78Gbps NRZ Host Side or
  4x26.56Gbps NRZ Host Side (Close Media- Side KP1 FEC Inside Module)
- 100Gbps Hermetic BOSA with 1330/1270nm EML and PIN Detector
- Single LC Optical Interface Compliant
- DDM Function Implemented
- Maximum Link Length of 10km on SMF Fiber
- Low Power Dissipation: <4W
- International Class 1 Laser Safety Certified
- Operating Temperature Range: 0℃ ~+70 ℃
- Compliant with ROHS6

APPLICATIONS

- 100GBASE-LR-BiDi

PRODUCT DESCRIPTION

The module is with the QSFP28 38-pin connector to allow hot plug capability. The internally ac coupled high speed serial I/O simplifies interfacing to external circuitry. Only single 3.3V power supply is needed.
A serial EEPROM in the transceiver allows the user to access transceiver digital diagnostic monitoring and configuration data via the 2-wire QSFP28 Management Interface. This interface uses a single address, A0h, with a memory map divided into a lower and upper area. Basic digital diagnostic data is held in the lower area while specific data is held in a series of tables in the high memory area.

ORDER INFORMATION

P/No.	Bit Rate (Gb/s)	Distance (km)	Wavelength(nm)	Package	Temp. (ºC)	TX Power (dBm)	RX Sens. (dBm)	RoHS Compliant
OPN-Q7M1312-10LC	106.25	10	TX 1330 / RX 1270	QSFP28, Simplex LC	0 to +70	−1.9 to +4.8	−1.6 OMA*	Yes

Absolute Maximum Ratings					
Parameter	**Symbol**	**Min**	**Max**	**Units**	**Notes**
Storage Temperature Range	TS	-50	+85	℃	
Relative Humidity	RH	5	+85	%	OPN-Q7M1312-10LC
Power Supply Voltage	VCC	-0.5	+3.6	V	
Operating Case Temperature Range	TC	0	70	℃	
Receiver Damage Threshold Per Lane	Pdag	5.8		dBm	

Professional high-speed optical transceiver

Recommended Operating Conditions					
Parameter	**Symbol**	**Min**	**Typ**	**Max**	**Units / Notes**
Operating Case Temperature	Topr	0	—	70	°C
Power Supply Voltage	Vcc	3.135	3.3	3.465	V
Data Rate (Electrical)	BR	25.78125 × 4	26.5625 × 4	—	Gbps
Data Rate (Optical)	BR	—	106.25	—	Gbps
Link Distance with G.652	L	—	—	10	km

Transmitter Specifications (0°C ≤ Topr ≤ 70°C, 3.135V ≤ Vcc ≤ 3.465V)						
Parameter	**Symbol**	**Min**	**Typ**	**Max**	**Units**	**Notes**
Optical						
Transmitter Rate	Rs	—	53.125 ±100 ppm	—	GBd	
Lane Center WL (1270 nm)	λc	1264.5	1270	1277.5	nm	
Lane Center WL (1330 nm)	λc	1324.5	1330	1337.5	nm	
Side-mode Suppression Ratio	SMSR	30	—	—	dB	
Optical Output Power	Pout	−1.9	—	4.8	dBm	
Optical Modulation Amplitude, TDECQ < 1.4 dB	OMAouter	1.1	—	5	dBm	
Optical Modulation Amplitude, 1.4 dB < TDECQ ≤ 3.4 dB	OMAouter	TDECQ − 0.3	—	5	dBm	
Transmitter and Dispersion Penalty Eye Closure for PAM4	TDECQ	—	—	3.4	dB	
Transmitter Eye Closure	TECQ	—	—	3.4	dB	
TDECQ − TECQ	TDECQ − TECQ	—	—	2.5	dB	
Extinction Ratio	ER	3.5	—	—	dB	
Average Launch Power of OFF Transmitter	Poff	—	—	−15	dBm	
Transmitter Over/Under-Shoot	—	—	—	22	%	
Optical Return Loss Tolerance	ORLT	—	—	15.6	dB	
Transmitter Reflectance	Rtx	—	—	−26	dB	
Transmitter Transition Time	Tr/Tf	—	—	17	ps	
RINxOMA (Max), where x is the Optical Return Loss Tolerance (Max)	RINxOMA	—	—	−136	dB/Hz	
Electrical						
Differential Data Input Swing	Vin, diff	—	—	900	mV	
Differential Impedance	Zin, diff	—	100	—	Ω	
Differential Termination Mismatch	ΔZ	—	—	10	%	

Receiver Specifications (0°C ≤ Topr ≤ 70°C, 3.135V ≤ Vcc ≤ 3.465V)						
Parameter	**Symbol**	**Min**	**Typ**	**Max**	**Units**	**Notes**
Optical						
Receive Rate	Rs	—	53.125 ±100 ppm	—	GBd	
Lane Center WL (1330 nm)	λc	1324.5	1330	1337.5	nm	
Lane Center WL (1270 nm)	λc	1264.5	1270	1277.5	nm	
Damage Threshold	Pdmg	5.8	—	—	dBm	
Average Receive Power	Pin,avg	−8.2	—	4.8	dBm	
Receiver Power (OMA)	OMAouter	—	—	5	dBm	
Receiver Sensitivity (OMA), TDECQ < 1.4 dB	Sen	—	—	−1.6	dBm	
Receiver Sensitivity (OMA), 1.4 dB	Sen	—	—	−7.5 +	dBm	

Professional high-speed optical transceiver

< TDECQ ≤ 3.4 dB				TECQ		
Stressed Sensitivity (OMA)	Sen,st	—	—	−4.1	dBm	
Receiver Reflectance	Rrx	—	—	−26	dB	
Electrical						
Differential Data Input Swing	Vin, diff	—	—	900	mV	
Eye Height, Differential Output	EH	228	—	—	mV	
Eye Width, Output	EW	0.57	—	—	UI	
Differential Impedance	Zdiff	—	100	—	Ω	
Differential Termination Mismatch	ΔZ	—	—	10	%	

PIN DEFINITION

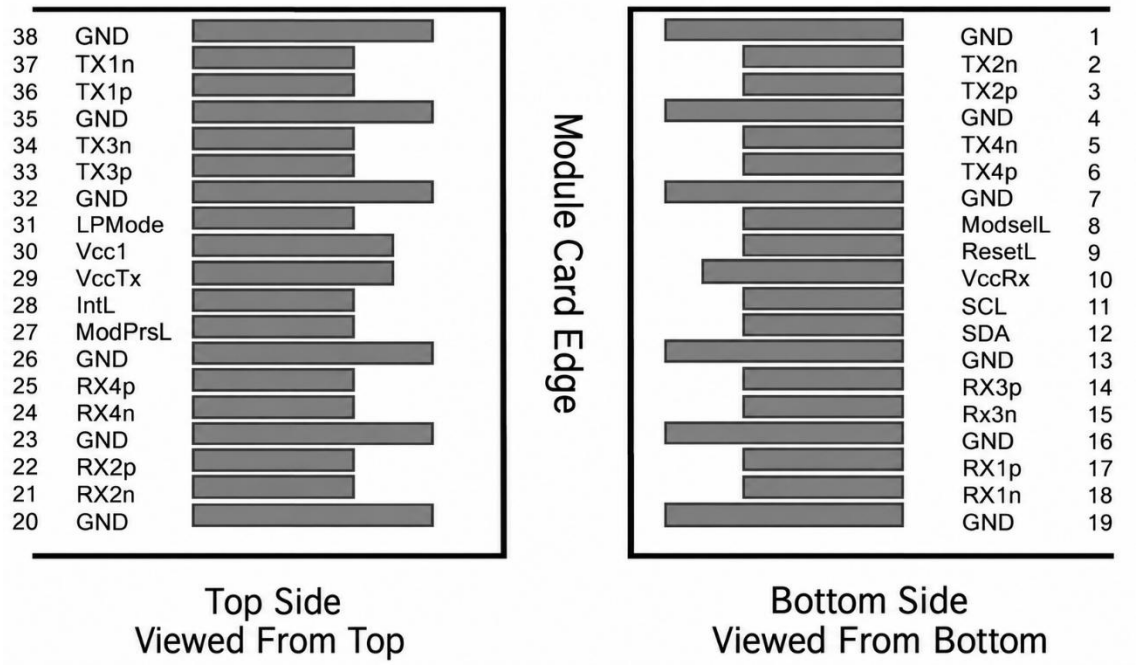

PIN	Definition	Description	Note
1	GND	Ground	1
2	Tx2n	Transmitter Inverted Data Input	
3	Tx2p	Transmitter Non-Inverted Data Input	
4	GND	Ground	1
5	Tx4n	Transmitter Inverted Data Input	
6	Tx4p	Transmitter Non-Inverted Data Input	
7	GND	Ground	1
8	ModSelL	Module Select	
9	ResetL	Module Reset	
10	VCCRx	+3.3V Power Supply Receiver	2
11	SCL	2-Wire Serial Interface Clock	
12	SDA	2-Wire Serial Interface Data	
13	GND	Ground	1
14	Rx3p	Receiver Non-Inverted Data Output	
15	Rx3n	Receiver Inverted Data Output	

16	GND	Ground	1
17	Rx1p	Receiver Non-Inverted Data Output	
18	Rx1n	Receiver Inverted Data Output	
19	GND	Ground	1
20	GND	Ground	1
21	Rx2n	Receiver Inverted Data Output	
22	Rx2p	Receiver Non-Inverted Data Output	
23	GND	Ground	1
24	Rx4n	Receiver Inverted Data Output	
25	Rx4p	Receiver Non-Inverted Data Output	
26	GND	Ground	1
27	ModPrsL	Module Present	
28	IntL	Interrupt	
29	VccTx	+3.3 V Power Supply Transmitter	2
30	Vcc1	+3.3 V Power Supply	2
31	LPMode	Low Power Mode	
32	GND	Ground	1
33	Tx3p	Transmitter Non-Inverted Data Input	
34	Tx3n	Transmitter Inverted Data Input	
35	GND	Ground	1
36	Tx1p	Transmitter Non-Inverted Data Input	
37	Tx1n	Transmitter Inverted Data Input	
	GND	Ground	1

Notes:

1. GND is the symbol for signal and supply (power) common for the QSFP28 module. All are common within the module and all module voltages are referenced to this potential unless otherwise noted. Connect these directly to the host board signal common ground plane.

2. VccRx, Vcc1 and VccTx are the receiving and transmission power suppliers and shall be applied concurrently. Recommended host board power supply filtering is shown in Figure below. Vcc Rx, Vcc1 and VccTx may be internally connected within the module in any combination. The connector pins are each rated for a maximum current of 1000mA.

Professional high-speed optical transceiver

PRINCIPLE DIAGRAM

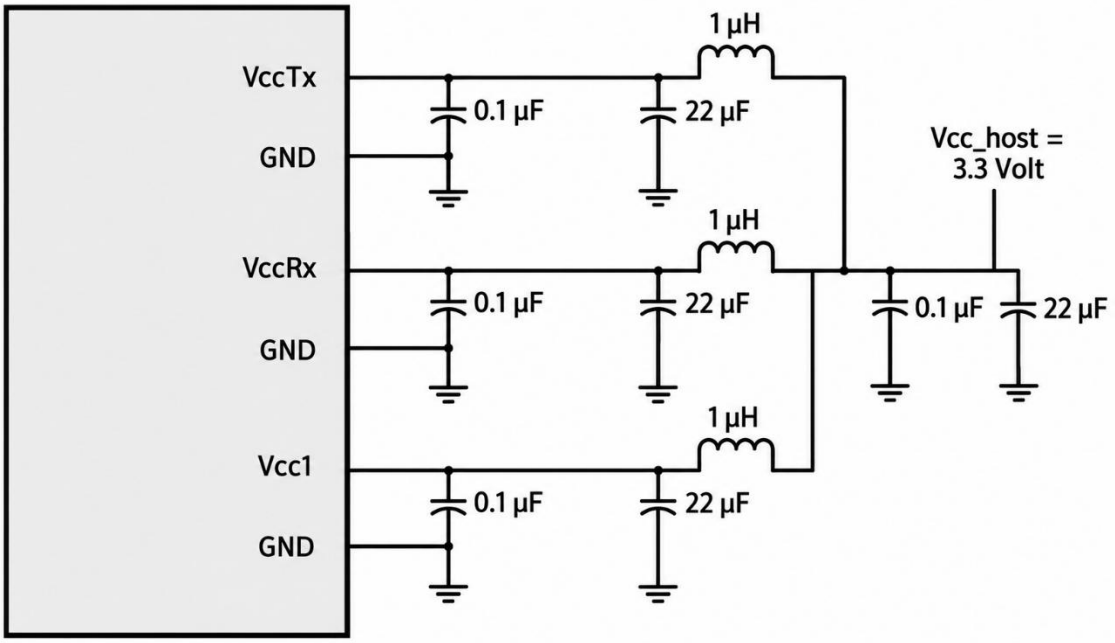

PACKAGE DIAGRAM

Units in mm

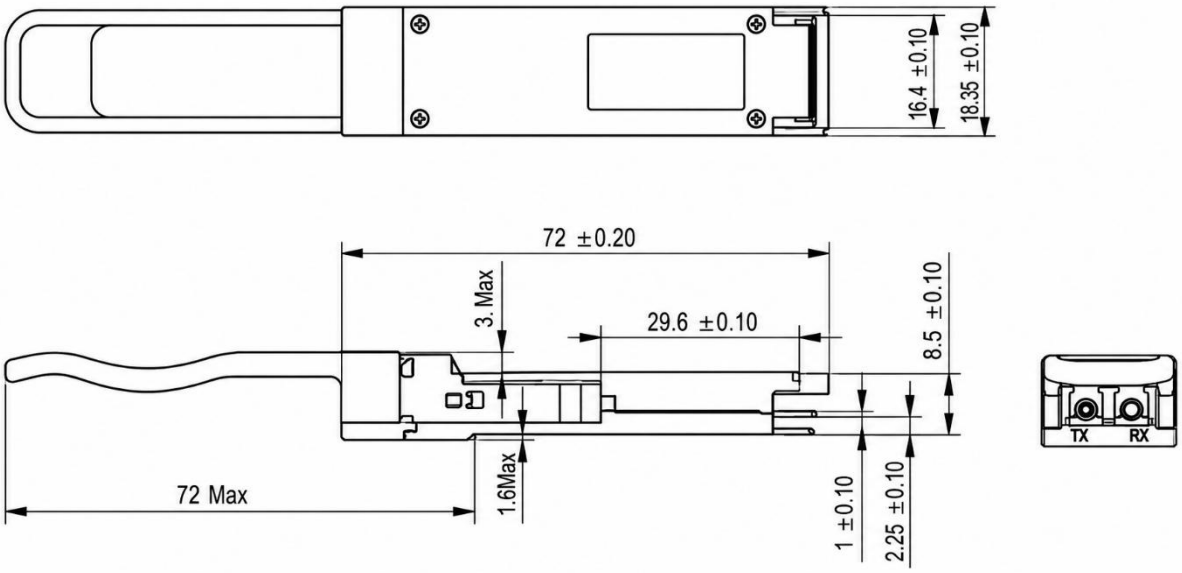

Note: Specifications subject to change without notice.